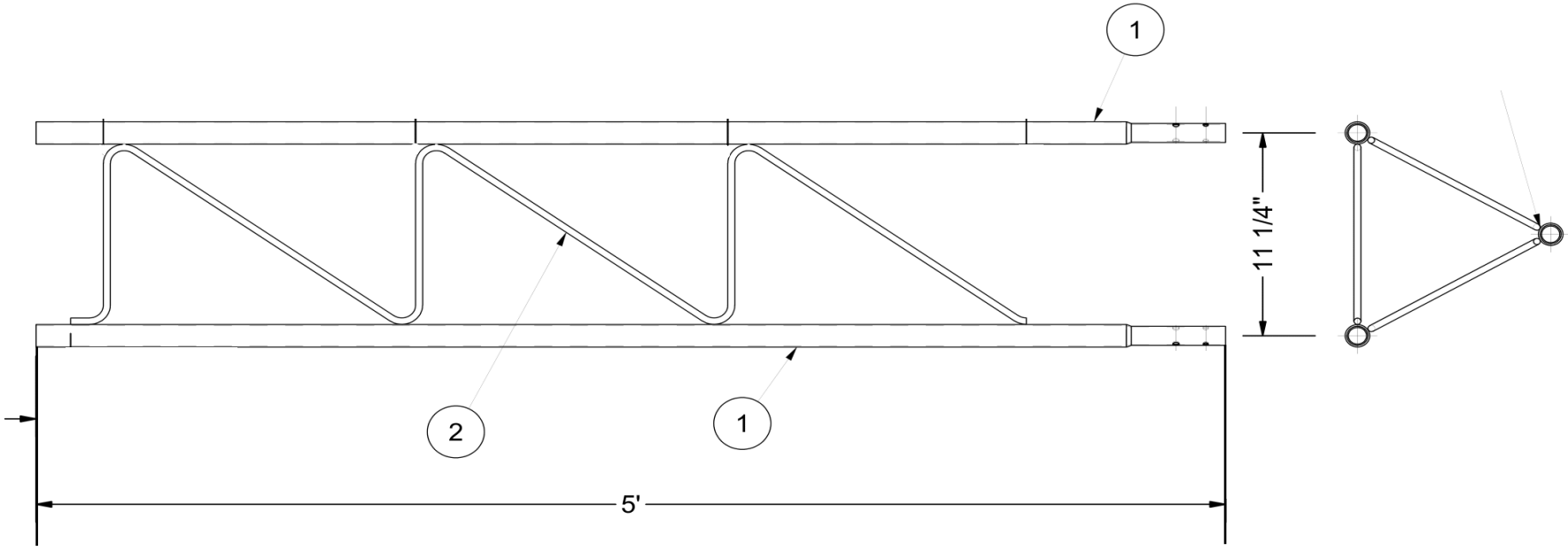

ITEM	QTY	PART NUMBER	DESCRIPTION
1	3	1235	TOWER LEG – 1-¼" X 16 GA
2	3	1157	0.3125" SOLID BRACING

Parts List

AMERITE
P.O. Box 29 Shelby, Ohio 44875
info@amertower.com
www.amertower.com
Since 1953
Telephone (419) 347-1185
Fax (419) 347-1654

TITLE
AMERITE 25 5'-0 BASE

SIZE	DWG NO	SHT. #
A	1236	1

DRAWN BY: DOW DATE 12/1/2004