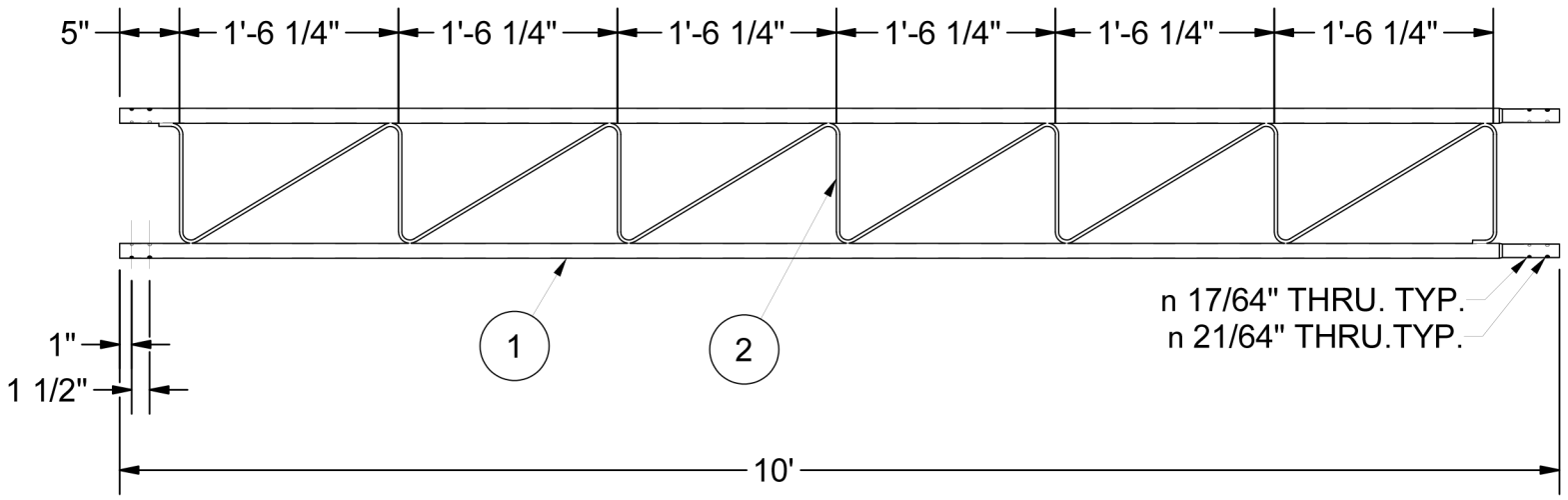

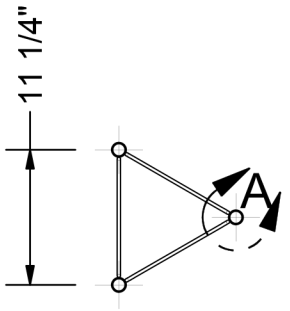

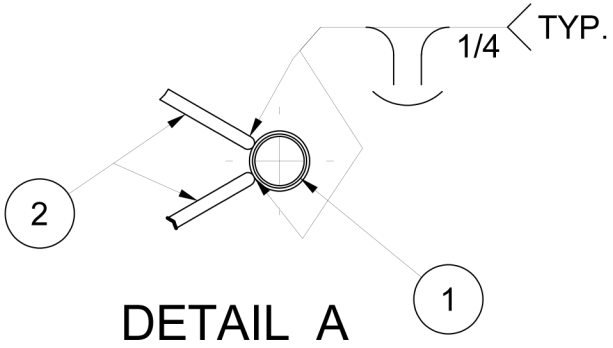

DETAIL A

TOWER SPECIFICATIONS

CENTER DISTANCE BETWEEN SIDES	11 1/4
SECTION WEIGHT	40 Lbs
SIDE RAIL DIAMETER AND GAGE	1 1/4 - 16 GA
ALLOWABLE VERTICAL LOAD ON BOTTOM SECTION	11,700 Lbs
MAXIMUM ALLOWABLE AXIAL COMPRESSION OF ONE SIDE	3,900 Lbs
SAFE MOMENT OF RESTRAINT	3,170 FT-Lbs

ITEM	QTY	PART NUMBER	DESCRIPTION
2	3	1155	BENT STIFFENER
1	3	1169	TOWER LEG

Parts List

AMERICAN TOWER COMPANY
ISO 9001-2000
P.O. Box 29 Shelby, Ohio 44875
info@amertower.com
www.amertower.com
Since 1953
Telephone (419) 347-1185
Fax (419) 347-1654

TITLE
AMERITE 20 MID-SECTION

SIZE	DWG NO	REV
A	1170	

DRAWN BY: DOW DATE 4/3/2004