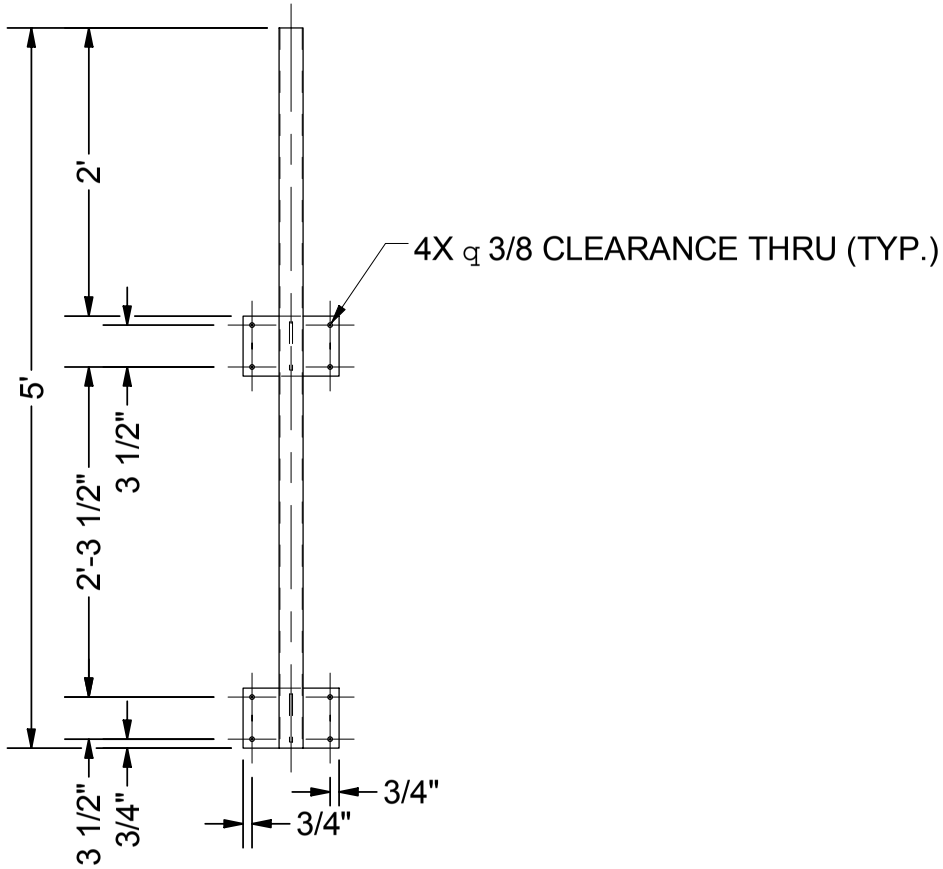

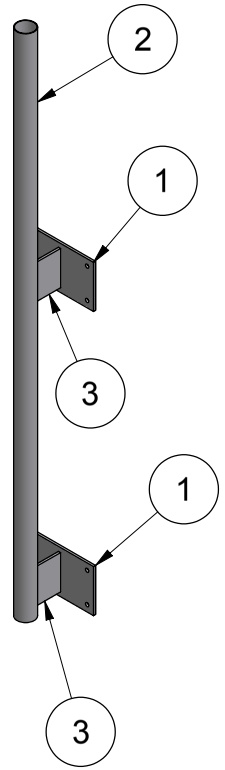

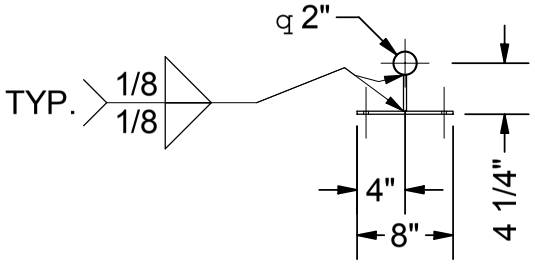

ITEM	QTY	PART NUMBER	DESCRIPTION
3	2	1286	1/4 x 3 HR FLT x 0'-4
2	1	1285	2 O.D. x 16 GA. x 5'-0
1	2	1283	LEDGE MOUNT BASE PLATE

Parts List

AMERICAN TOWER COMPANY
ISO 9001-2000
P.O. Box 29 Shelby, Ohio 44875
info@amertower.com
www.amertower.com
Since 1953
Telephone (419) 347-1185
Fax (419) 347-1654

TITLE
WALL MOUNT

SIZE	DWG NO	SHT. #
A	1286	1

DRAWN BY: DOW DATE 5/23/2005